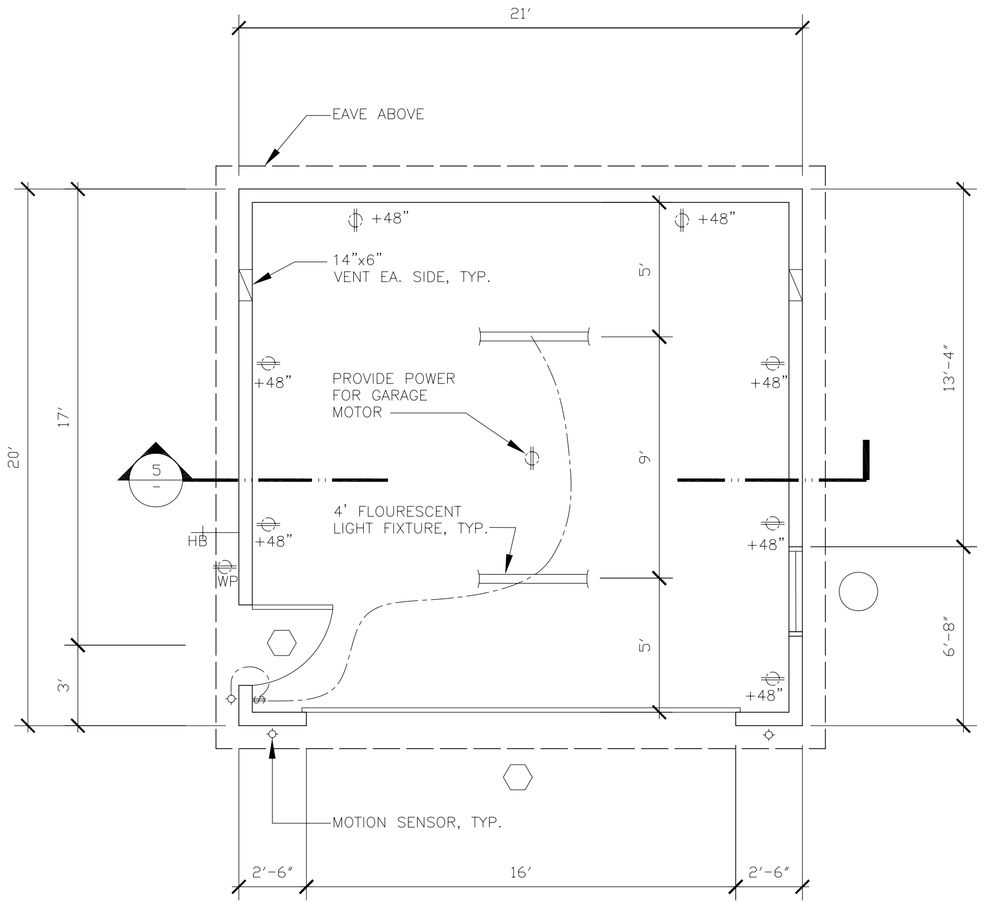

FLOOR PLAN
SCALE: 1/4" = 1'-0"
1

NOTE: ALL ELECTRICAL PER CITY
OF L.A. ELECTRICAL CODE.

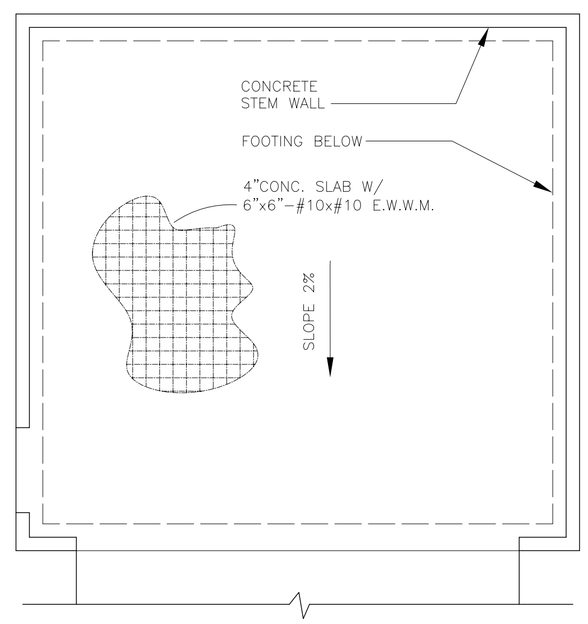

FOUNDATION PLAN
SCALE: 1/4" = 1'-0"
2

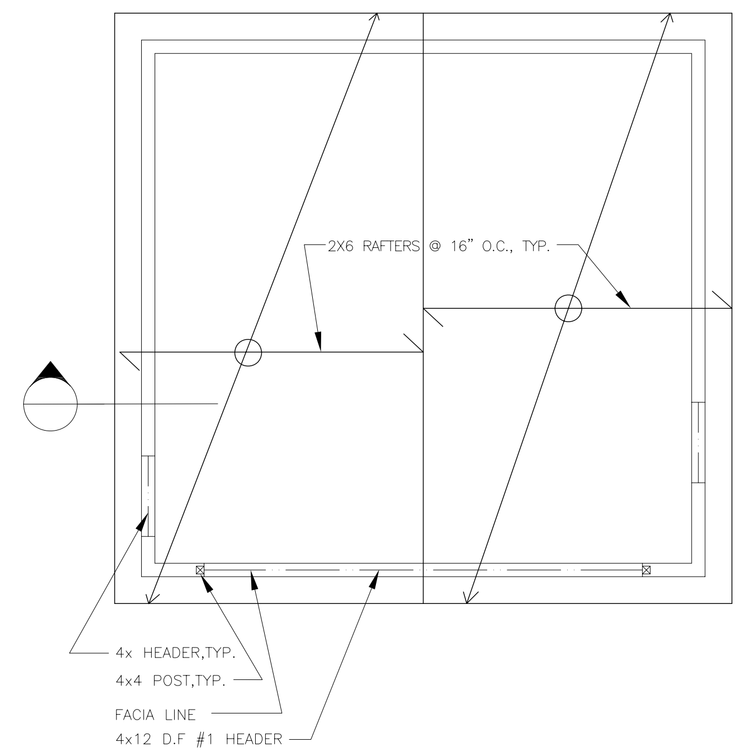

FRAMING PLAN
SCALE: 1/4" = 1'-0"
3

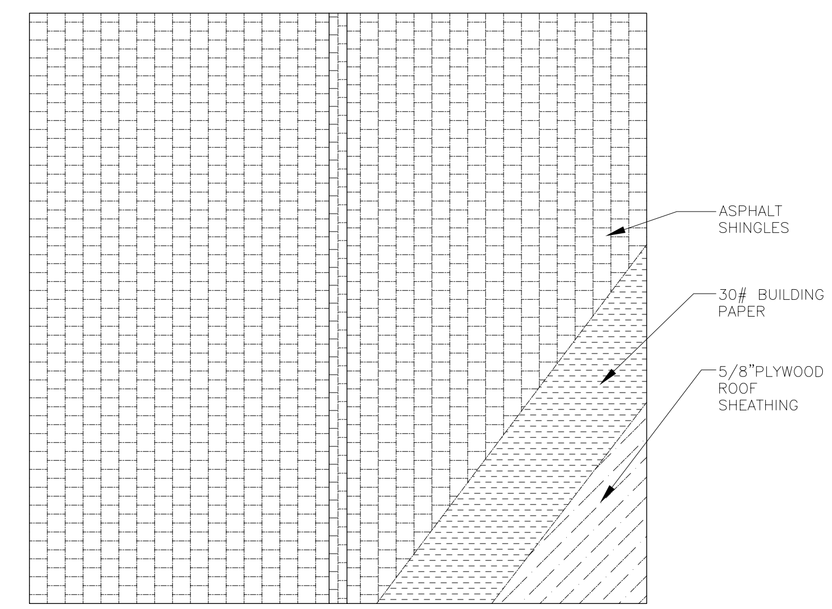

ROOF PLAN
SCALE: 1/4" = 1'-0"
4

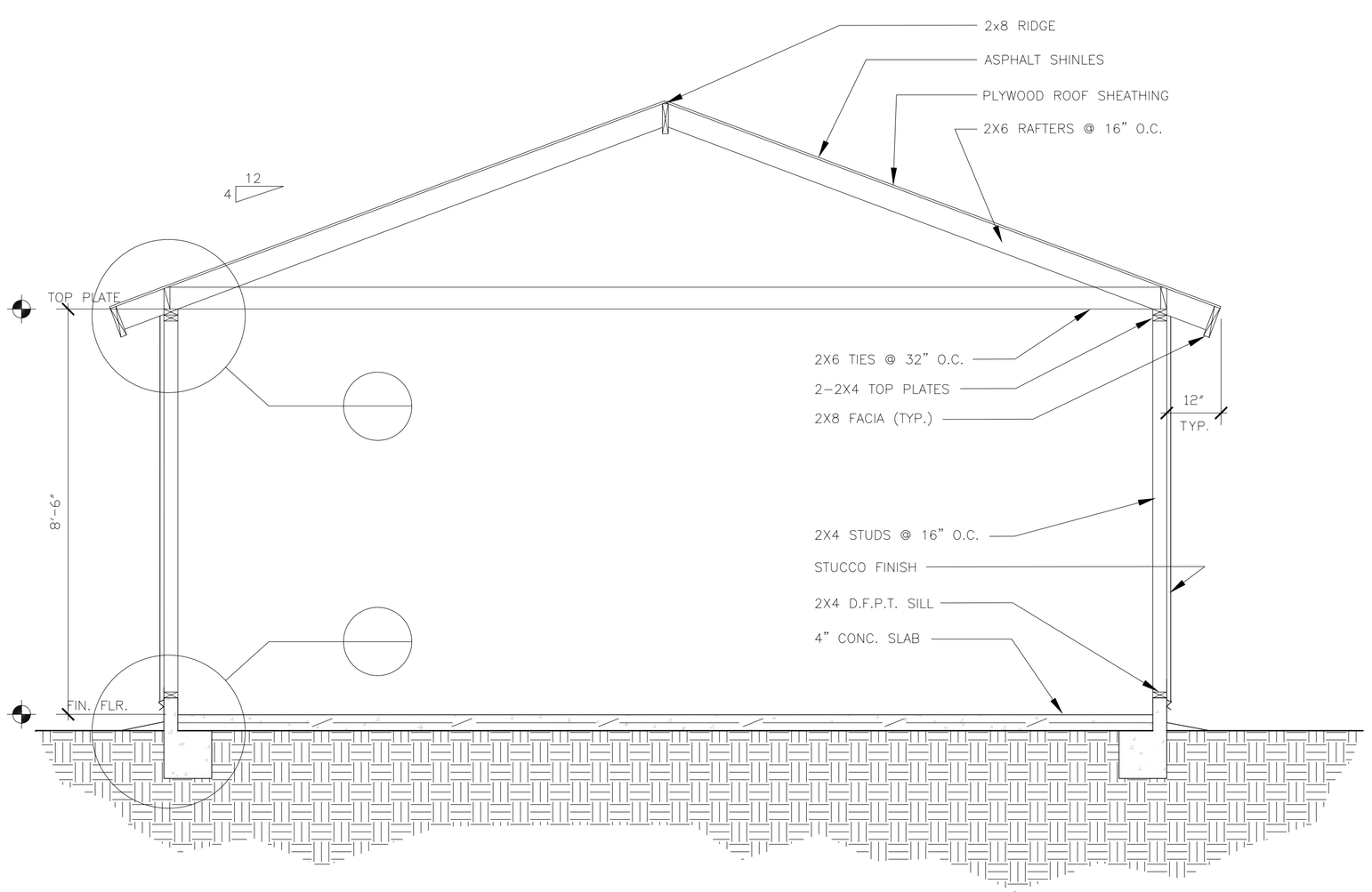

BUILDING SECTION
SCALE: 1/2" = 1'-0"
5

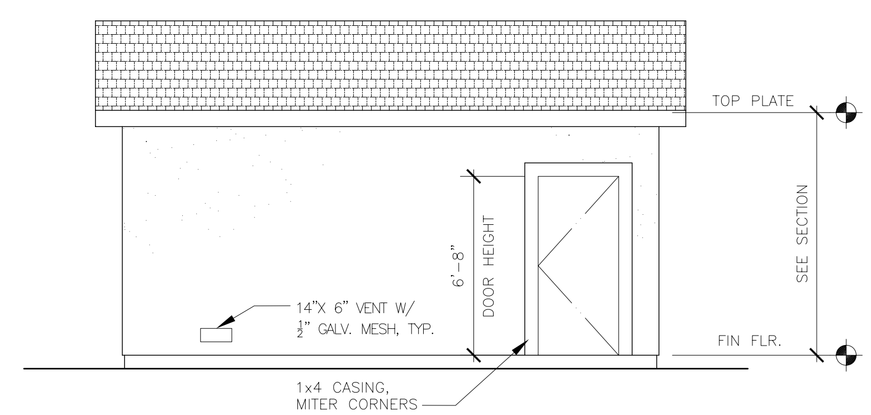

EAST ELEVATION
SCALE: 1/4" = 1'-0"
6

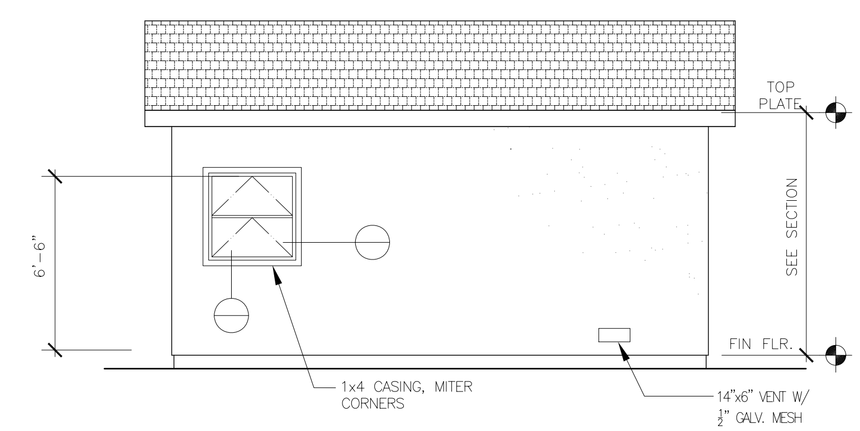

WEST ELEVATION
SCALE: 1/4" = 1'-0"
7

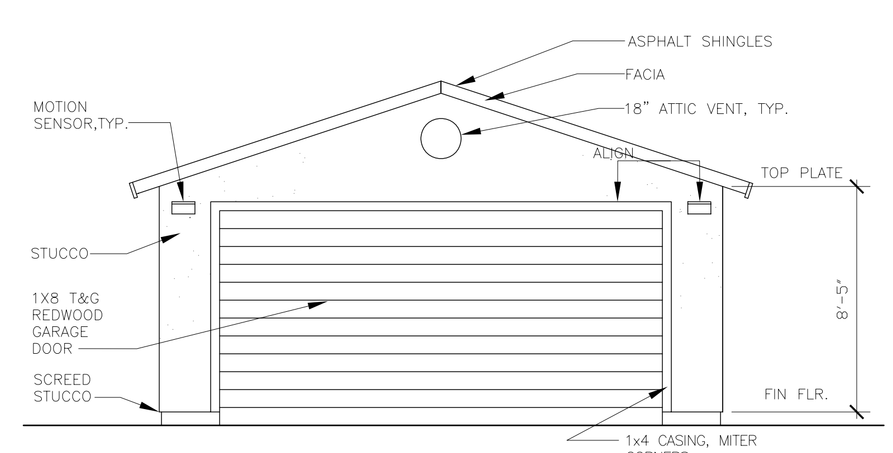

SOUTH ELEVATION
SCALE: 1/4" = 1'-0"
8

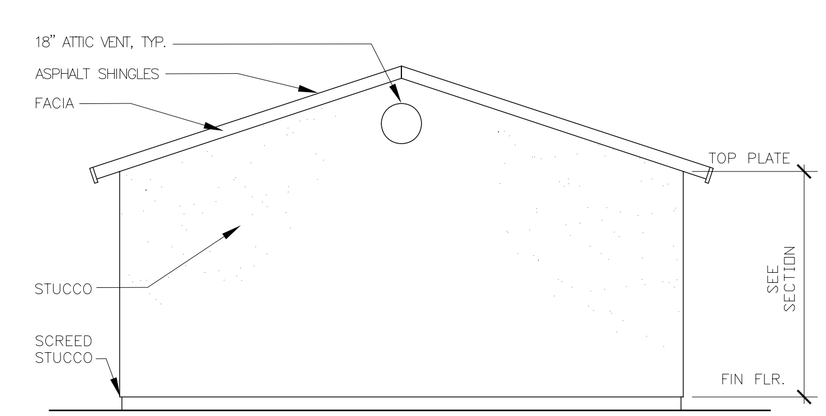

NORTH ELEVATION
SCALE: 1/4" = 1'-0"
9

Xref E:\Arc 172\GARAGE\TITLE block03.dwg